STANDARD PEDESTRIAN RAMP

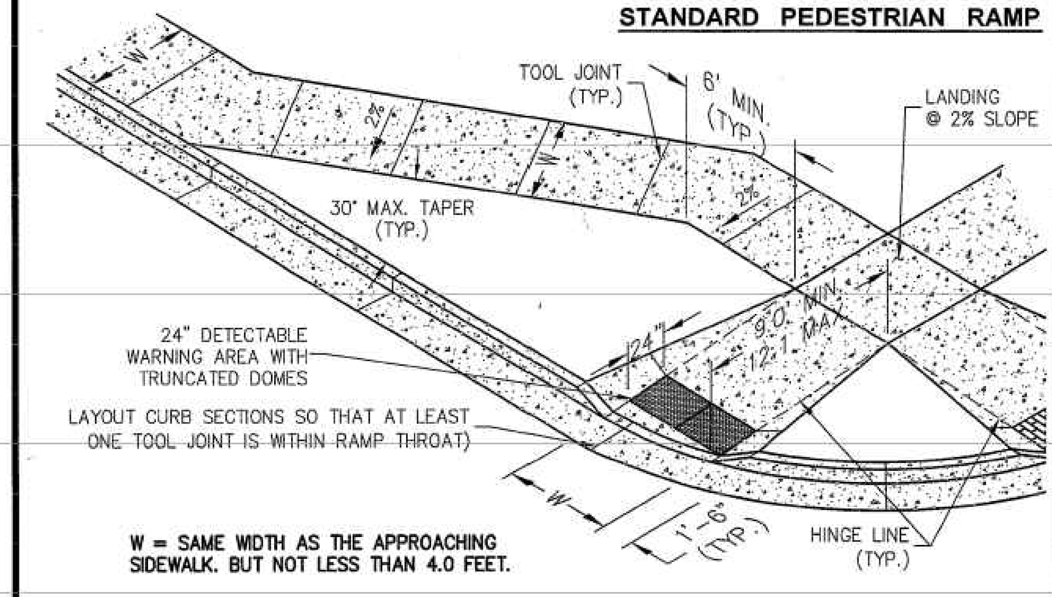

GENERAL NOTES

1. All work shall be done in accordance with current City of Colorado Springs Engineering Division Standard Specifications.
2. Contractor to obtain required Concrete Permits prior to construction.
3. Contractor to notify Engineering Division Inspection Office at least 24 hours prior to placement of any concrete.
4. Pedestrian ramps with 24" detectable warning area shall be 4000 psi, plain concrete, with a coarse broom finish perpendicular to direction of travel.
5. Contractor shall stamp their company name and construction date within the pedestrian ramp area.
6. Ramp location and length may require modification to maintain the 12:1 maximum running slope due to intersection street grades and/or alignment.
7. Where the 1'-6" flared side(s) of a perpendicular curb ramp is (are) contiguous with a pedestrian or hard surface area, the flare width shall be increased to 8' minimum and the maximum flare slope shall not exceed 10:1.
8. Pedestrian walkway and/or location of existing or future pedestrian ramps on opposite corners shall be reviewed before constructing new ramps. New ramps shall align with existing ramps and pedestrian walkway.
9. At marked pedestrian crossings, the bottom of the ramps, exclusive of the flare sides, shall be totally contained within the markings.
10. Detectable warning area shall be prefabricated reddish integrally colored truncated-dome surfaced concrete pavers or the pre-cast panels from the City's approved product list.

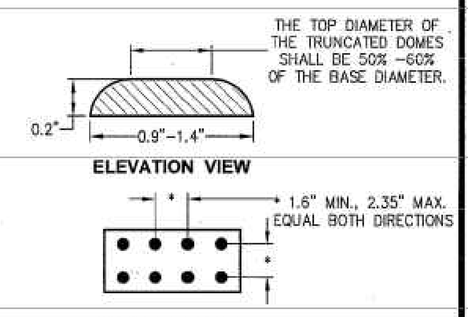

TRUNCATED DOME DETAILS

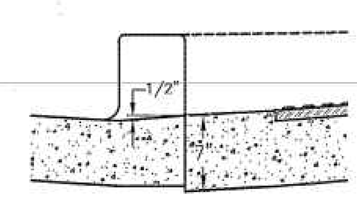

FLOWLINE TO RAMP RISE

CITY OF COLORADO SPRINGS
PEDESTRIAN RAMP GENERAL DETAILS
Approved By: City Engineer
Drawn By: J.Niño | Date: Jan.,2005 | STD. D-8A

STANDARD PEDESTRIAN RAMP

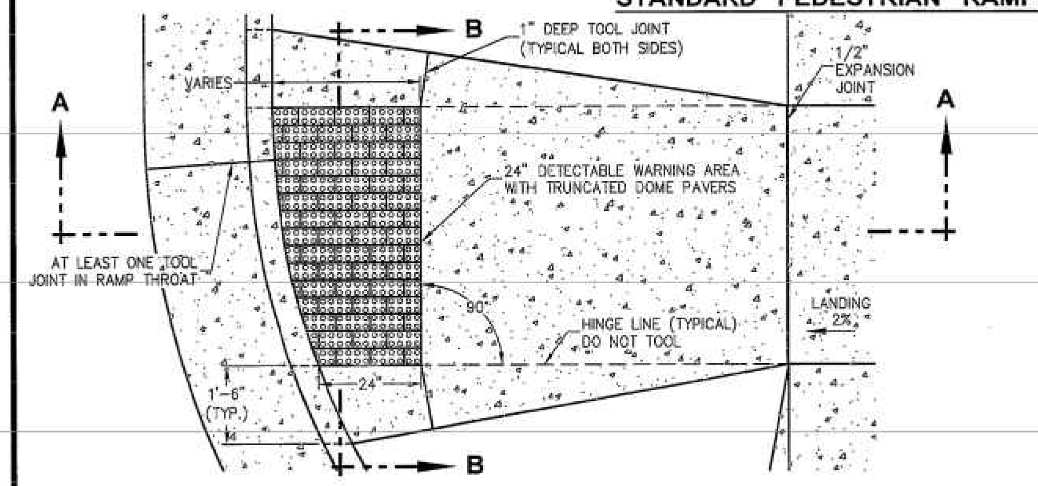

RAMP WITH DETECTABLE PAVERS

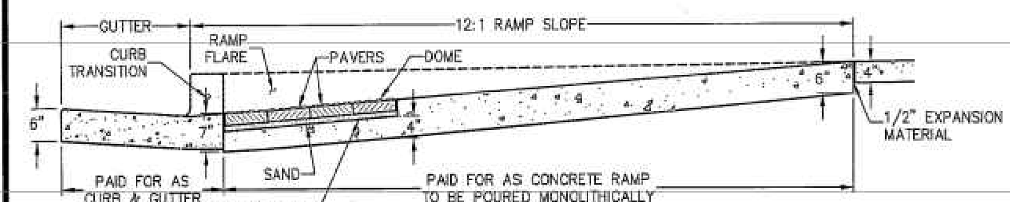

SECTION A-A

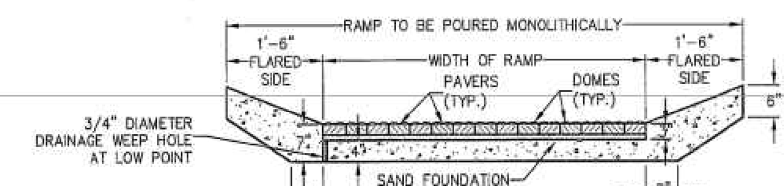

SECTION B-B

NOTES

1. Detectable warning pavers shall be prefabricated reddish integrally colored truncated domes surfaced concrete or masonry pavers. Pavers shall meet the requirements of ASTM C 902 or ASTM C 936 and comply with ADA requirements.
2. Prior to start of work, Contractor shall submit, to City Engineering for approval, a sample paver and documentation from the manufacturer. Pavers surface shall have a minimum of 70% light reflectivity contrast with the adjoining surface.
3. Well for pavers shall be accurately blocked out to ensure proper depth, alignment, and uniform grade. Only full width pavers shall be used to obtain specified ramp throat width.
4. Pavers shall be placed in the running pattern shown, domes placed in a square grid and aligned in the direction of travel. Pavers shall be installed so that the bases of the truncated domes are at the same elevation as the adjoining ramp surface.
5. Sand for bedding material shall conform to ASTM C 33. Sand to be placed between joints shall conform to ASTM C 144.
6. Bedding sand shall be screed to the appropriate depth ahead of the pavers installation. A plate vibrator shall be used to embed the pavers into the sand. Any pavers that are damaged during transport or installation will be rejected and shall be replaced at the Contractor's expense.
7. When cut pavers are required, cut sections shall not significantly impact overall truncated domes pattern and cut domes shall be beveled at a 45-degree angle to create a smooth transition.
8. Joint spacing shall be in accordance with the manufacturer's recommendations, but shall not be more than 1/8". Joints shall be filled completely with joint sand. Excess sand shall be removed by sweeping.

CITY OF COLORADO SPRINGS
PEDESTRIAN RAMP DETAILS FOR DETECTABLE PAVERS
Approved By: City Engineer
Drawn By: J.Niño | Date: Jan.,2005 | STD. D-8B

SOURCE: ASTM A-798 "INSTALLING FACTORY-MADE CORRUGATED STEEL SEWER PIPE.
ASTM D-2321 UNDERGROUND INSTALLATION OF FLEXIBLE THERMOPLASTIC SEWER PIPE.

TRENCH BEDDING FOR FLEXIBLE PIPE

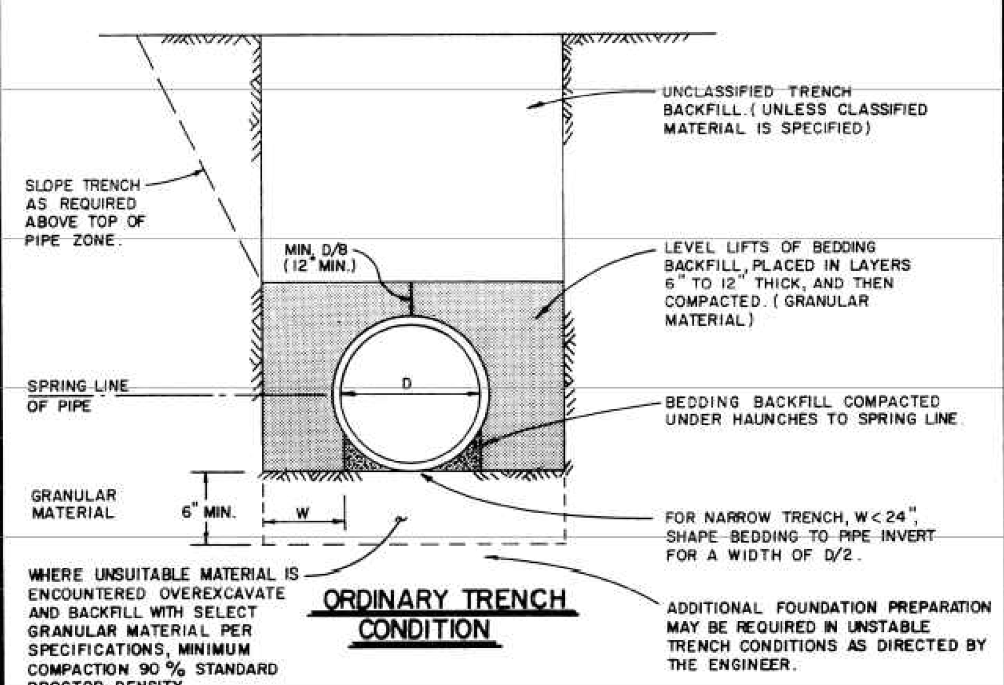

ORDINARY TRENCH CONDITION

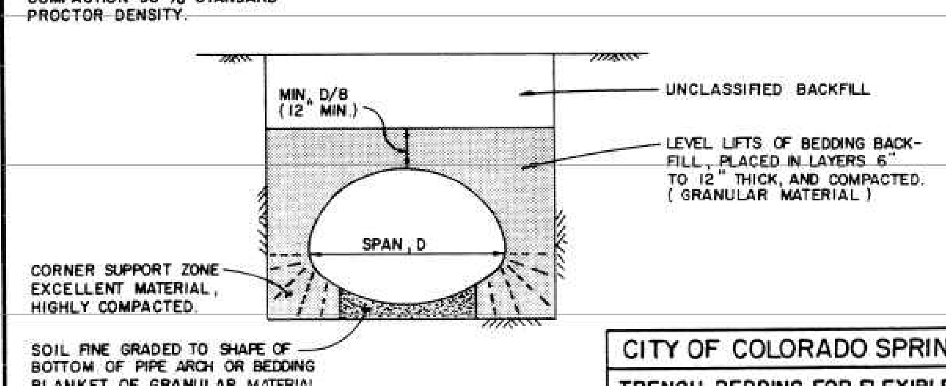

SHAPED BEDDING
(PIPE - ARCH)

CITY OF COLORADO SPRINGS
TRENCH BEDDING FOR FLEXIBLE PIPE
APPROVED BY CITY ENGINEER
SCALE: NO SCALE | DATE: JAN.90 | DRAWN: P.L.B. | SHEET D - 32

SOURCE: AMERICAN CONCRETE PIPE ASSOCIATION

TRENCH BEDDING CLASSIFICATION - ROUND PRECAST CONCRETE PIPE

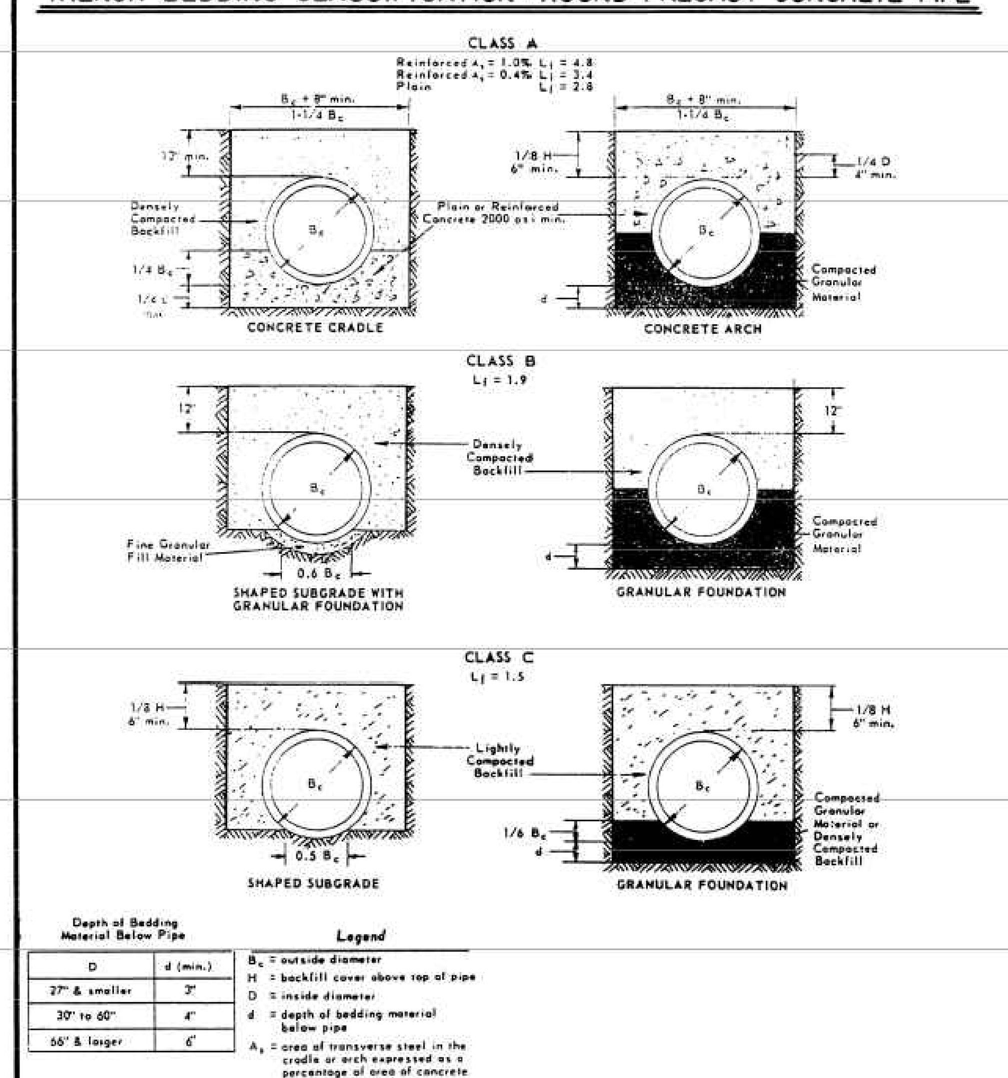

Depth of Bedding Material Below Pipe

D	d (min.)
27" & smaller	3"
30" to 60"	4"
66" & larger	6"

Legend

- B_c = outside diameter
- H = backfill cover above top of pipe
- D = inside diameter
- d = depth of bedding material below pipe
- A_s = area of transverse steel in the cradle or arch expressed as a percentage of area of concrete at invert or crown.

Notes:
For Class B and C beddings, subgrades should be excavated or over excavated, if necessary, so a uniform foundation free of protruding rocks may be provided.
Special care may be necessary with Class A or other unyielding foundations to cushion pipe from shock when blasting can be anticipated in the area.

CITY OF COLORADO SPRINGS
TRENCH BEDDING CLASSIFICATION
APPROVED BY CITY ENGINEER
SCALE: NO SCALE | DATE: JAN.90 | DRAWN: P.L.B. | SHEET D - 30

FOR BID ONLY

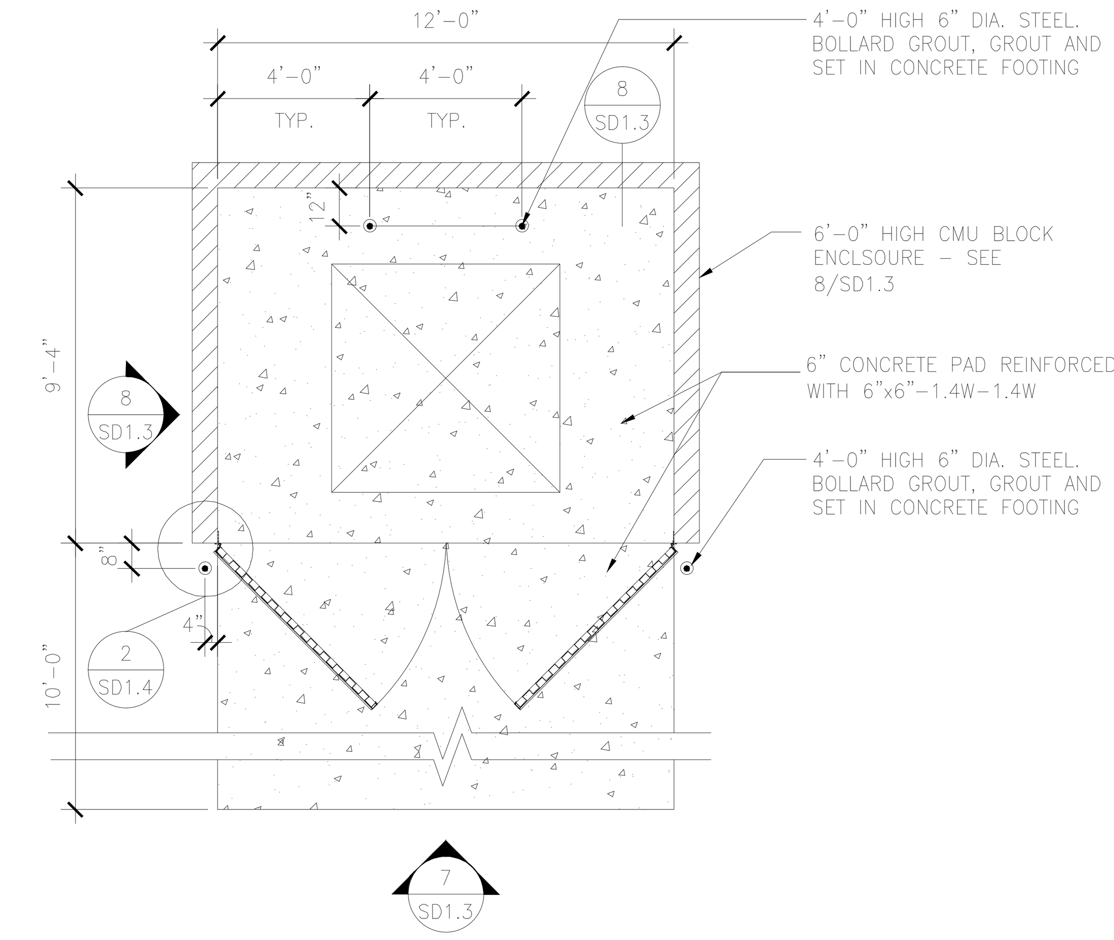

TRASH ENCLOSURE (PLAN)
N.T.S.

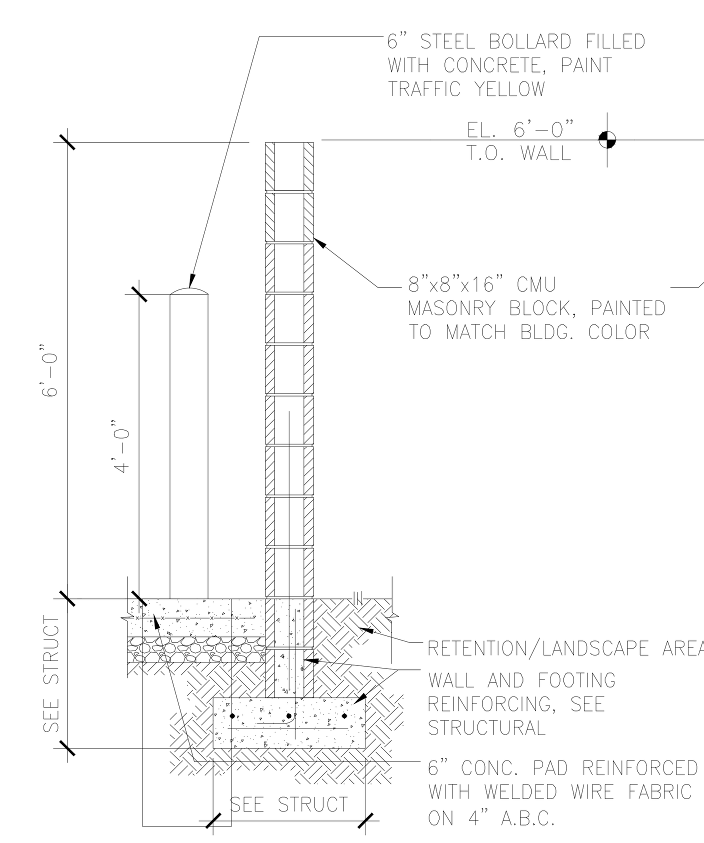

A-SECTION

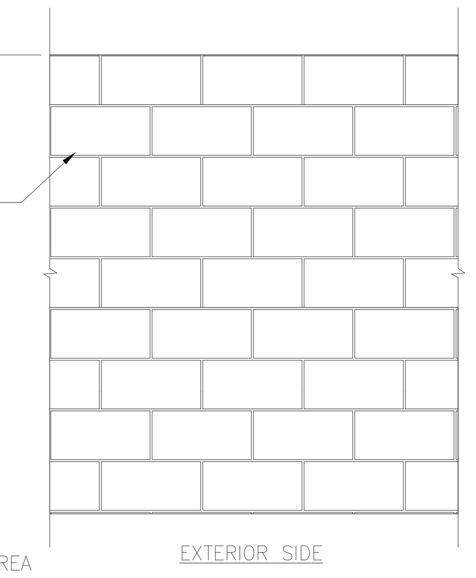

B-ELEVATION

6'-0" TRASH ENCLOSURE
N.T.S.

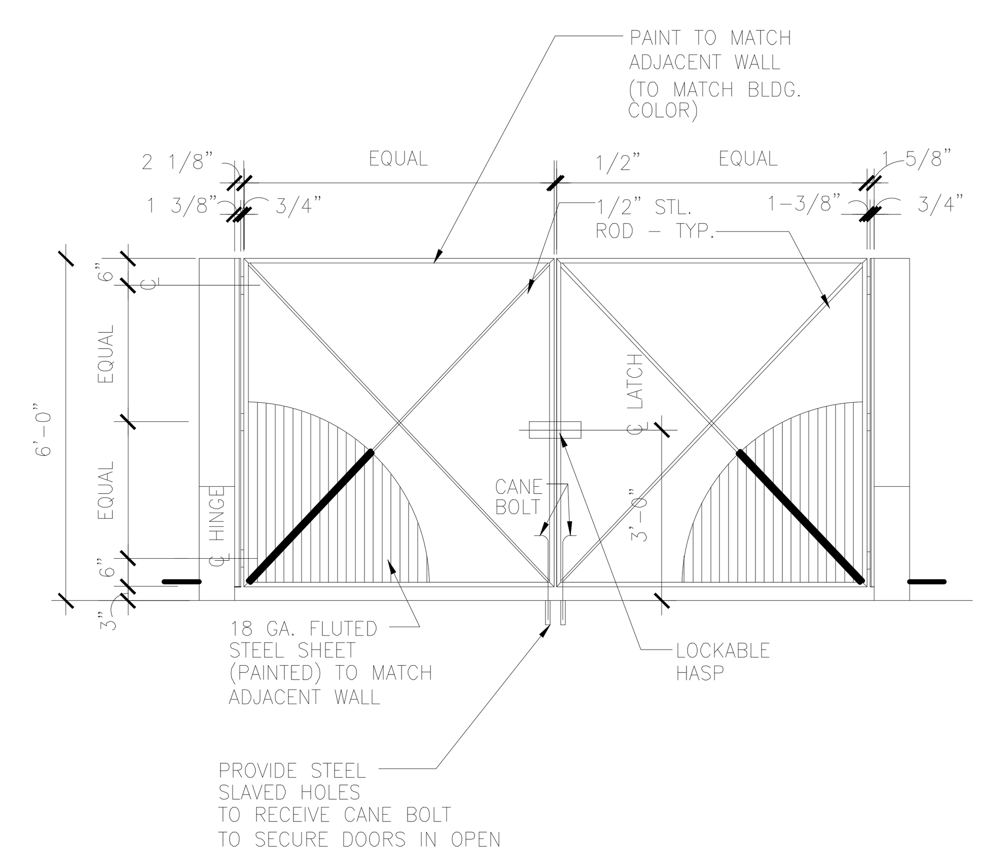

ENCLOSURE GATE ELEVATION
N.T.S.

GreenbergFarrow
COA#:
5500 Democracy Dr. Suite 125
Plano, TX 75024
t: 972 514 7641

PROJECT TEAM

COPYRIGHT NOTICE
This drawing is the property of the above referenced Professional and is not to be used for any purpose other than the specific project and site named herein, and cannot be reproduced in any manner without the express written permission from the Professional

ISSUE/REVISION RECORD

DATE	DESCRIPTION
04-11-14	INITIAL BIDSET
08-12-14	DEVELOPMENT PLAN
12-17-14	DP RESUBMITTAL #1
02-20-15	DP RESUBMITTAL #2

PROFESSIONAL SEAL

PROFESSIONAL IN CHARGE
FARMAN SHIR, PE
PROFESSIONAL ENGINEER
LICENSE NO. 41391
PROJECT MANAGER
MARLEY PHILLIPS
QUALITY CONTROL
KIEW KAM, PE
DRAWN BY
NICOLE NOVACK

PROJECT NAME

CIRCLE K

COLORADO SPRINGS COLORADO

E. FOUNTAIN BLVD. & ACADEMY PARK LOOP

PROJECT NUMBER
20130780

SHEET TITLE
DETAILS

SHEET NUMBER